Q3.

The diagram below shows a computer network. The devices connected to the network are identified using IPv4 addresses. When assigning IP addresses, 20 bits have been allocated to the Network IDs (also known as Subnet IDs or subnet addresses) and 12 bits have been allocated to the Host IDs.

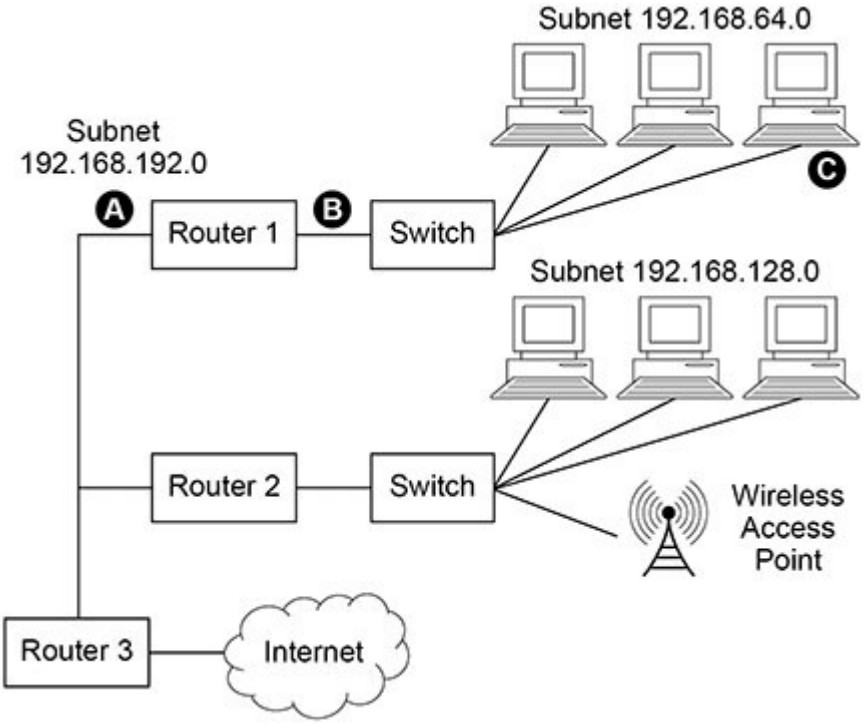

(a) State suitable IP addresses for:

The Router 1 port labelled A 192.168.192.0

The Router 1 port labelled B 192.168.192.1

The computer labelled C 192.166.64.2

(3)

(b) Shade **one** lozenge to indicate which of the following four subnet masks is the one that has been assigned to the devices connected to the network in the diagram above.

A	255.255.0.0	⬭
B	255.255.15.0	⬭
C	255.255.240.0	X
D	255.255.255.0	⬭

(1)

(c) The devices on the network in the diagram above use IPv4.

State **one** reason why IPv6 has been introduced to replace IPv4.

Ipv6 doesn't require the use a NAT as there are enough IP addresses available

(1)

(d) State the name of the physical topology used in subnet 192.168.64.0 in the diagram above.

Star

(1)

(e) Laptop computers and other devices can connect to the network via the wireless access point. The wireless connection uses the CSMA/CA protocol with Request to Send/Clear to Send (RTS/CTS).

A laptop connected to the wireless access point has data to send to another computer.

Explain how the CSMA/CA protocol with RTS/CTS will be used during this transmission.

The laptop checks if the wireless medium is free by listening to activity. If the medium is clear the laptop sends an RTS frame to the access point requesting permission to trasmit. The access point responds with a CTS frame, infroming the laptop and other devices that the medium is reserverd for this. The laptop transmits its data while the other devices wait, avoiding collisions. The receiving computer sends a frame back confirming that the transfer has been successful.

(6)

(Total 12 marks)

Q4.

A company is setting up a computer network to help manage its business.

The company sets up a computer that will act as a server. The server's primary role will be to act as an email server. It will also allow technicians to remotely login so that the server can be managed from other computers.

State the names of **two application layer** protocols that the server must implement and explain what each will be used for.

Protocol 1: SMTP

Use: sending emails from clients to email server

Protocol 2: SSH

Use: Used to provide secure remote login access

(Total 4 marks)

Q5.

An estate agency makes details of the properties that it has for sale available to potential customers through a website. The details of the properties and other data that are useful to the agency are stored in a relational database.

The individual web pages about specific properties that a customer can view are

generated dynamically by a program from the data in the database.

A client-server system, which uses CRUD and REST, is used to provide details of properties in a web page that is being viewed in a web browser on a client computer.

Figure 1 shows the structure of the relations in the database.

Figure 1

Property(PropertyID, HouseNum, Street, Area, Postcode, Bedrooms, Bathrooms, AskingPrice, SellerID)

Seller(SellerID, Title, Forename, Surname, Telephone)

Buyer(BuyerID, Title, Forename, Surname, Telephone, DesiredArea, MinBedrooms, MaxPrice)

Viewing(BuyerID, PropertyID, ViewingDate, ViewingTime)

Sale(SaleID, PropertyID, BuyerID, SalePrice)

- The Property relation stores details of the properties that are for sale. This includes the number of bedrooms and the number of bathrooms that a property has.
- The Seller relation stores details of people who are selling the properties.
- The Buyer relation stores details of the people who are looking to buy a property and information about the type of property they want, including the area that they want to live in, the minimum number of bedrooms that they need in a property and the maximum price that they are prepared to pay.
- An entry is made in the Viewing relation whenever a buyer arranges to look at a property.
- An entry is made in the Sale relation whenever a property is sold to a buyer. The SalePrice may be different to the AskingPrice for the property.

(a) The list below contains four statements about the principles of CRUD and REST. One of these statements is false.

Shade **one** lozenge to indicate which statement is **false**.

A CRUD is an acronym for Create, Retrieve, Update, Delete. ⬭

B REST allows JavaScript to communicate with the server using the HTTP protocol. ⬭

C The database is connected to the web browser using REST. ⬭

D The REST API will be created and run on the client computer. X

(1)

An SQL query is executed to retrieve some details about properties with at least four bedrooms in a particular area. The following two records are found:

PropertyID	HouseNum	Street	Bedrooms
8026	12	Chester Drive	4
9034	23a	Castle Street	5

These records could be sent from the server to the client using XML or JSON.

Figure 2 shows the query results encoded using each of these methods.

Figure 2

Representation 1	**Representation 2**
{"Properties":[{ "PropertyID": 8026, "HouseNum": "12", "Street": "Chester Drive", "Bedrooms": 4 }, { "PropertyID": 9034, "HouseNum": "23a", "Street": "Castle Street", "Bedrooms": 5 }]}	<Properties> <Property> <PropertyID>8026</PropertyID> <HouseNum>12</HouseNum> <Street>Chester Drive</Street> <Bedrooms>4</Bedrooms> </Property> <Property> <PropertyID>9034</PropertyID> <HouseNum>23a</HouseNum> <Street>Castle Street</Street> <Bedrooms>5</Bedrooms> </Property> </Properties>

(b) Shade **one** lozenge to identify the method of encoding used by **Representation 2**.

A JSON ○

B XML X

(1)

(c) State **two** reasons why it could be argued that JSON is better than XML.

Reason 1 Less characters therefore can be read quicker

Reason 2 Easier to read

(2)

(d) A composite primary key has been selected for the Viewing relation. This consists of the attributes BuyerID, PropertyID and ViewingDate.

In selecting these attributes to form the primary key, what assumption has the database designer made about the behaviour of the buyers?

They're assuming that the buyers wont view the data more than one time

(1)

Figure 1 is repeated below so that you can answer part (e) without having to turn back in the question paper.

Figure 1

Property(PropertyID, HouseNum, Street, Area, Postcode, Bedrooms, Bathrooms, AskingPrice, SellerID)

Seller(SellerID, Title, Forename, Surname, Telephone)

Buyer(BuyerID, Title, Forename, Surname, Telephone, DesiredArea, MinBedrooms, MaxPrice)

Viewing(BuyerID, PropertyID, ViewingDate, ViewingTime)

Sale(SaleID, PropertyID, BuyerID, SalePrice)

(e) Write an SQL query that will retrieve from the database the list of all properties that the buyer with BuyerID 23 might be interested in buying. The properties should:

- be in the buyer's desired area
- have at least the minimum number of bedrooms the buyer requires
- cost no more than the maximum price that the buyer is prepared to pay.

The list of properties returned should only include, for each property, the following details:

- the PropertyID
- the street that the property is on
- the number of bedrooms that the property has
- the asking price for the property.

The list should be ordered with the most expensive property at the top of the list and the least expensive at the bottom of the list.

```
SELECT Property.PropertyID, Property.Street, Property.Bedrooms,
Property.AskingPrice
FROM Property
INNER JOIN Buyer ON Property.Area = Buyer.DesiredArea
WHERE Buyer.BuyerID = 23
AND Property.Bedrooms >= Buyer.MinBedrooms
AND Property.AskingPrice <= Buyer.MaxPrice
ORDER BY Property.AskingPrice DESC;
```

(5)

(Total 10 marks)

Q6.

Explain how the **transport layer** of the TCP/IP stack determines which application layer software on the server should deal with a received request.

Makes a header containing the destination and source port numbers of the server

(Total 1 mark)

Q7.

Describe **one** function of the **network layer** of the TCP/IP stack.

To handle IP addresses with protocols like ipv4 and v6

(Total 1 mark)

Q8.

The diagram shows the physical topology of a local area network (LAN) used by a company, and its connection to the Internet. The LAN uses the IPv4 protocol.

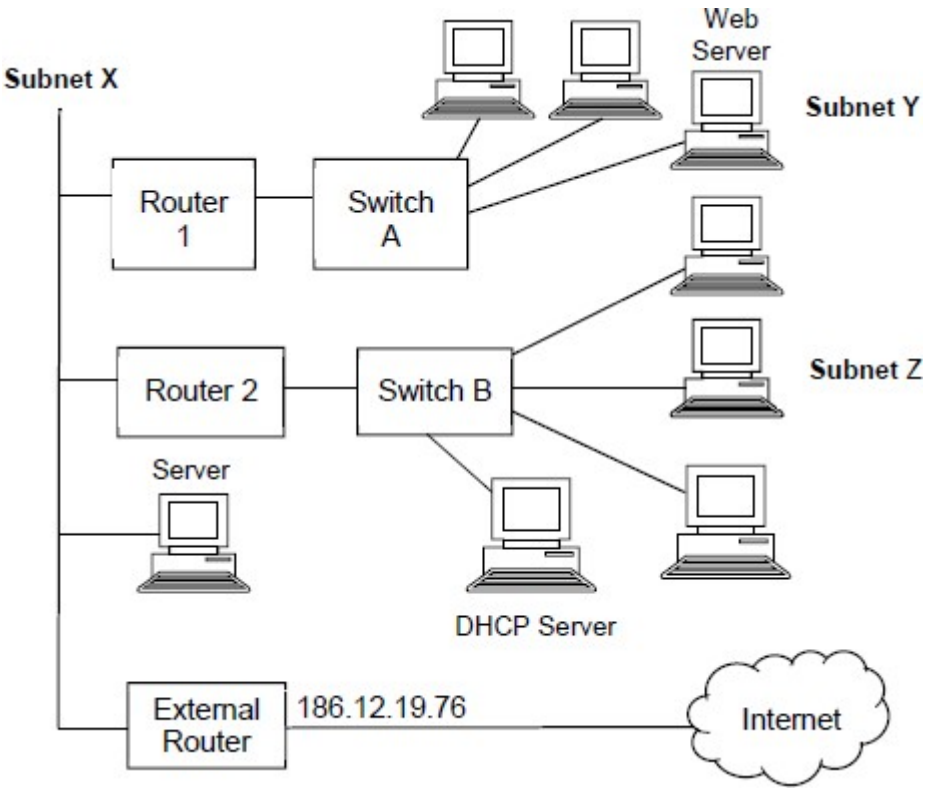

Internally, the network has been divided into subnets: 27 bits have been allocated to the network / subnet identifier.

(a) In binary, write out the subnet mask that has been programmed into the devices on the network.

111111111.11111111.11111111.00000000

(1)

(b) **Subnet Z** consists of all of the devices that are directly connected to Switch B.

What is the maximum number of devices that could be connected to **Subnet Z** at the same time?

(1)

(c) When a device wishes to join **Subnet Z** it communicates with the DHCP server.

Explain:

- the purpose of the DHCP system
- why the DHCP system is used
- what will happen during this communication.

It is used because of its effieciency as it atomatically configures devices and its easy to add and remove devices. The device broadcasts a request asking for IP configuration. The DHCP server responds with an available IP address and config details. The device requests to use the offered IP address. The server confirms the assignments, and the device receives its IP address, subnet mask, gateway and settings

(4)

(Total 6 marks)

Q9.

The web server, which has the IP address 192.168.16.12, must be accessible from computers that are connected to the Internet but outside the company's own network.

As the web server has a non-routable IP address, it cannot be accessed directly from outside the network. Therefore, access to the web server will be facilitated by the External Router, which supports Network Address Translation (NAT) and port forwarding.

Explain how the External Router will have been configured so that the web server can be accessed by computers outside the network.

(Total 2 marks)

Q10.

Figure 1 shows the physical topology of a local area network (LAN) and its connection to the Internet. The LAN uses the IPv4 protocol.

Figure 1

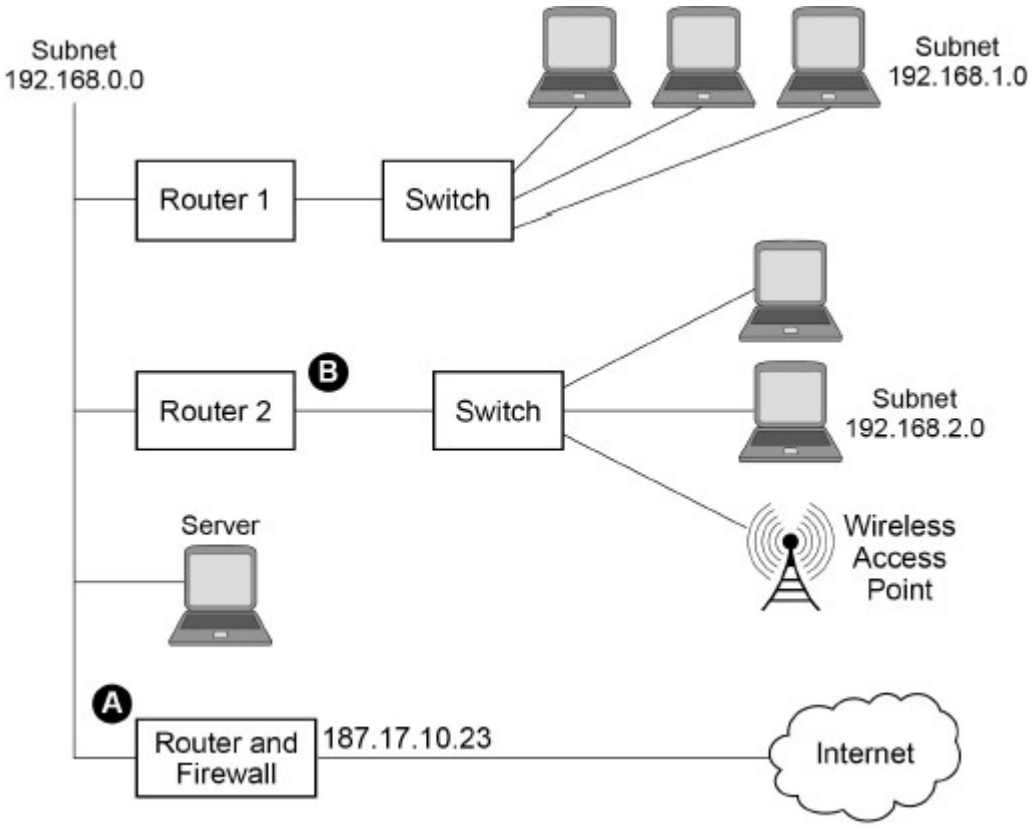

State suitable IP addresses for:

The 'Router and Firewall' port labelled A _____

The 'Router 2' port labelled B _____

(Total 2 marks)

Q11.

A web browser is used to access the World Wide Web.

Web pages can be retrieved from a web server using either the HTTP or the HTTPS protocol.

(a) What does HTTP stand for?

HyperText Transfer Protocol

(1)

(a) State **one** difference between HTTP and HTTPS.

HTTPS is encrypted where as HTTP is not

(1)
(Total 2 marks)

Q12.

A computer that retrieves a web page from a web server is known as a client.

Identify the TCP/IP layer that is concerned with ports and explain how a client port and a

well-known port are used when retrieving a web page.

_____

_____

_____

_____

_____

_____

_____

_____

(Total 3 marks)

Q13.

Put **one** tick (✔) on each row of the table below to classify each row as either a URL, a domain name, an IP address, a socket address or a protocol.

	URL	Domain name	IP address	Socket address	Protocol
Telnet					
192.168.10.23:80					
http://www.bbc.co.uk					

(Total 2 marks)

Q14.

A student is using her computer at school.

The diagram shows the physical topology of the Local Area Network (LAN) to which her computer is connected. The LAN is divided up into segments. It also shows a web server that her computer connects to through the Internet. The student is using the computer labelled S.

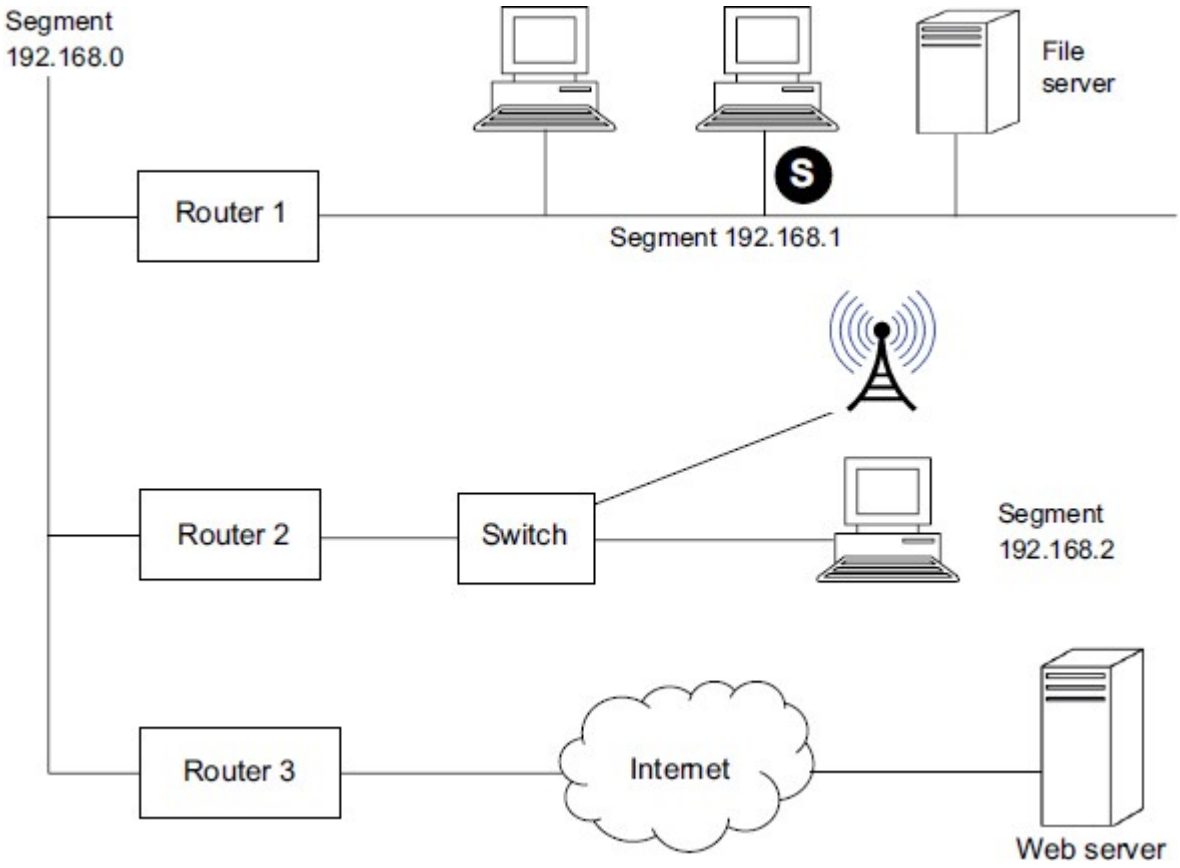

Write a detailed description of how one packet of data that the student is uploading to the web server will be routed from her computer in the UK to the web server that is located in Chicago in the USA. You may assume that the web browser software on the student's computer has already used a domain name server to look up the IP address of the web server.

Your description should cover:

- how the packet will be routed within the LAN from the student's computer to the router (Router 3) that links the LAN to the Internet **and**
- how the packet will be routed to the web server once the packet is on the Internet.

In your answer you will be assessed on your ability to use good English, and to organise your answer clearly in complete sentences, using specialist vocabulary where appropriate.

(Total 8 marks)